Pre-assembled, C-face Clutches and Brakes

UniModules offer the ultimate in Clutch/Brake performance and convenience. UniModules offer the same performance as EM's without the assembly required.

Completely pre-assembled one-piece clutch and clutch/brake packages in five sizes. Can be motor or reducer mounted or used as a separate drive unit powered by a prime mover.

Pre-assembled, pre-aligned, and pre-burnished at the factory for rated torque directly out-of-the-box.

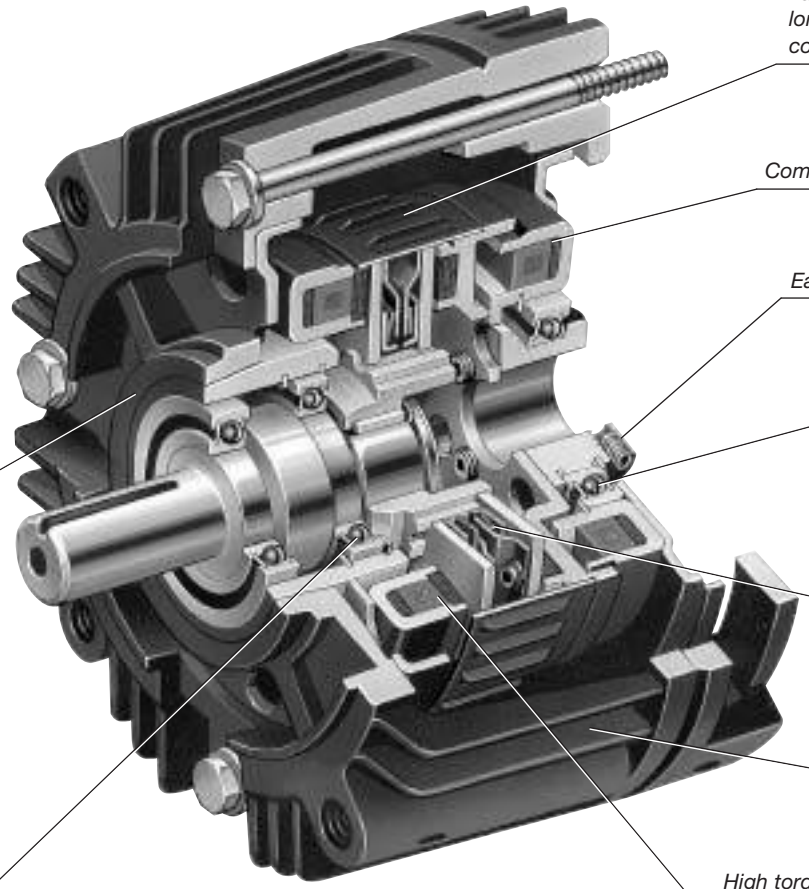

- Easy installation
- Available with standard power-on and electrically released power-off brake units
- Fan cooled for high cycle rate operation
- Maintenance Free
- Available in 50, 100, 180, 210, and 215 sizes. NEMA C-face design
- UL rated, CSA certified
- Can be applied with control fitted as standard
- Bearing mounted clutch rotor eases assembly alignment
- Single access hole for all wires

Easy Installation

1. Slide UniModule on to motor shaft.
2. Position vent holes to bottom and insert four capscrews.
3. Use Allen wrench to tighten rotor set screws.

1.

2.

3.

UniModule Combinations

Clutch Combinations

1040

Motor Clutch/Output Clutch
Use for clutch only applications. Has hollow bore input for mounting directly to C-face motors. Shaft and C-face on output side of unit accommodates reducer, parallel drive or coupling. Motor Clutch is fan cooled for long life and consistent performance. Basic components are field, rotor and armature. See page 29.

3040

Input Clutch/Output Clutch
Use for clutch only applications. Features dual C-faces and shafts. Unit input from parallel drive or coupling. Output to reducer. Input Clutch is fan cooled and has sealed coils. Twin bearing mounted shaft maintains tight concentricities. The Output Clutch utilizes Autogaps™ which automatically adjust armature for wear. Basic components are field, rotor and armature. See page 31.

3040-B

Input Clutch/Output Clutch – with Accessory Base Mounting
Base mounting allows the clutch unit to be utilized as a separate drive unit. Attach with pulleys, sprockets, etc. See page 31.

Clutch/Brake Combinations

1020

Motor Clutch/Brake
Use for clutch/brake applications. Has hollow bore input for mounting directly to C-face motors. Brake shaft and C-face on output side accommodate a reducer, parallel drive or coupling. Basic components: field, rotor, 2 armatures and power-on magnet. See page 28.

1020-FBC

Motor Clutch/Electrically Released Brake
Use for clutch/power-off brake applications. Has clutch input and brake on output side. Employs powerful permanent magnets for maximum torque when power is removed from the brake coil. Basic components are field, rotor, 2 armatures and power-off magnet. See page 119 for specifications.

2030

Input Clutch/Brake
Use for clutch/brake applications. Features dual C-faces and shafts. Input from parallel drive or coupling. Output to reducer. Basic components are field, rotor, 2 armatures and power-on magnet. See page 30.

2030-FBC

Input Clutch/Electrically Released Brake
Use for clutch/power-off brake applications. Has shafts on input and output sides. When electrical power is applied to the brake coil the brake releases. Ideal for dynamic cycling operations. Basic components are field, rotor, 2 armatures and power-off magnet. See page 119 for specifications.

2030-B

Input Clutch/Brake – with Accessory Base Mounting
Base mounting allows the clutch/brake units to be utilized as a separate drive unit. Attach with pulleys, sprockets, etc. See page 30.

2030-FBC-B

Input Clutch/Electrically Released Brake with Accessory Base Mounting
See page 130 for Electrically Released Brake specifications.

Selection

UniModule clutch, brake and clutch/brake units may be mounted directly to NEMA C-face motors and reducers, or can be base mounted.

1. Select Configuration

a. NEMA C-face Mounting

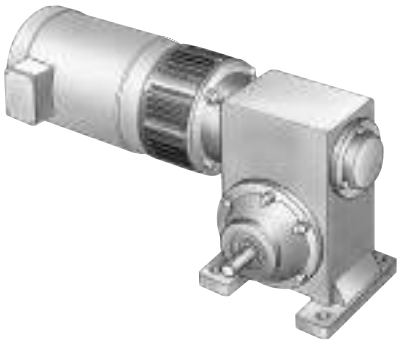

To select the correct UniModule package, determine the NEMA frame size of your motor and/or reducer, and choose the corresponding size UniModule from the Frame Size Selection chart.

Size UM-100 modules utilize a 5/8" diameter shaft to fit 56C/48Y motor frames with components of UM-180 units for higher torque and heat dissipation capacity than the UM-50.

UM-100 modules are available in 1020 and 2030 clutch/brake and 1040 and 3040 clutch configurations. For C-face mounting, select either a 1020 clutch/brake or a 1040 clutch configuration. The 2030 and 3040 configurations are for base mounting.

Frame Size Selection

NEMA Frame Size	UniModule Size
56C/48Y	UM-50* UM-100**
182C/143TC 184C/145TC	UM-180
213C/182TC 215C/184TC	UM-210
213TC/215TC	UM-215

* For 56C/48Y Frame motors 3/4 HP and smaller the UM-100 size may be used where extended life is desirable.

** UM-100 size is recommended for motors 1 HP and larger.

b. Base Mounting

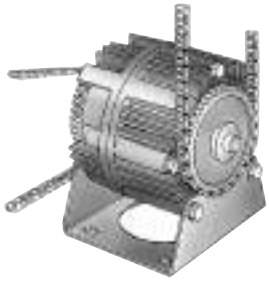

UniModule assemblies may be mounted as separate drive units driven from the prime mover by V-belts, chain and sprockets, couplings, timing belts and other standard power transmission components.

Select the correct size module from the Horsepower vs. Shaft Speed chart by determining the motor horsepower and RPM at the module location. The correct size UniModule is shown at the intersection of the HP and operating speed.

For additional sizing information, refer to the technical sizing procedure (step 2).

2. Determine Technical Requirements

Technical considerations for sizing and selection are torque and heat dissipation. Each merits careful consideration, especially heat dissipation as over time, use in excessive temperature environments will have an adverse effect on bearing life and coil wire insulation integrity.

Compare the calculated torque requirement with the average dynamic torque ratings. Select a unit with adequate torque. If the unit selected on torque is different than the unit selected based on heat, select the larger size unit.

Horsepower vs. Shaft Speed

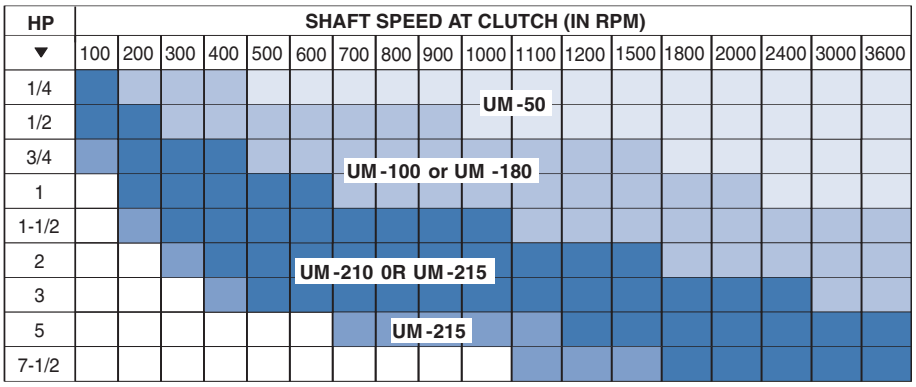

a. Heat Dissipation Sizing

Friction surfaces slip during the initial period of engagement and, as a result, heat is generated. The clutch/brake selected must have a heat dissipation rating greater than the heat generated by the application. Therefore, in high inertia or high cycle rate applications, it is necessary to check the heat dissipation carefully. Inertia, speed and cycle rate are the required parameters.

Heat dissipation requirement is calculated as follows:

$E = 1.7 \times WR^2 \times (N/100)^2 \times F$

where:

E = Heat (lb. ft./min.)

WR^2 = Total reflected inertia at the clutch/brake shaft. Include the clutch/brake output inertia. (lb.ft.^{2})

N = Speed in revolutions per minute. (RPM)

F = Cycle rate in cycles per minute (CPM)

Compare the calculated heat generated in the application to the unit ratings using the heat dissipation curves. Select the appropriate unit that has adequate heat dissipation ability.

Heat Dissipation Curves

Size 50

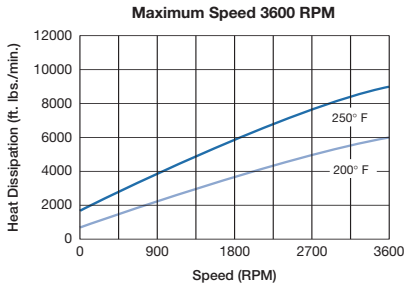

Size 100/180

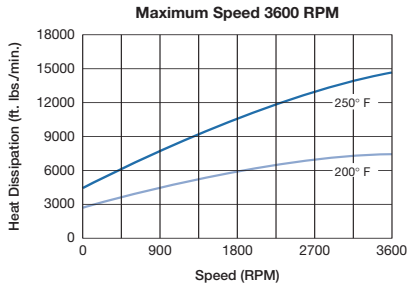

Size 210/215

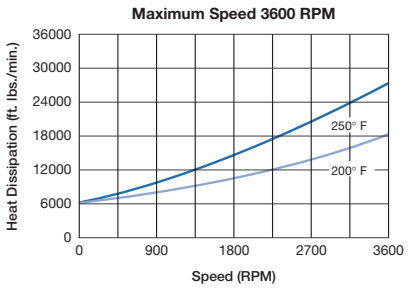

b. Torque Sizing

For most applications, the correct size clutch/brake can be selected from the Horsepower vs. Shaft Speed chart located at the bottom of this page. Determine the motor horsepower and the RPM at the clutch/brake. The correct size unit is shown at the intersection of horsepower and shaft speed.

If the static torque requirements are known, refer to the technical ratings chart to select a unit.

For some applications, the torque requirement is determined by the time allowed to accelerate and decelerate the load. (This time is generally specified in milliseconds.) For these applications, it is necessary to determine the torque requirement based on load inertia and the time allowed for engagement.

The torque requirements are calculated as follows:

$T = (WR^2 \times N) / (308 \times t)$

where:

T = Average Dynamic Torque (lb. ft.)

WR^2 = Total reflected inertia at the clutch/brake shaft. Include the clutch/brake output inertia. (lb. ft.^{2})

N = Speed in revolutions per minute. (RPM)

t = Time allowed for the engagement (sec)

C-face Clutch/Power-on Brake Dynamic Torque Curves

Size 50

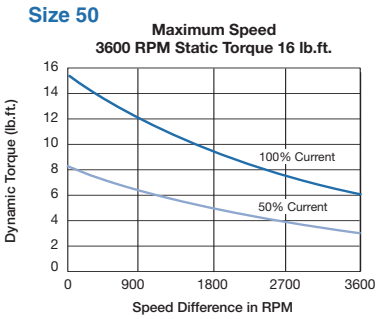

Size 100/180

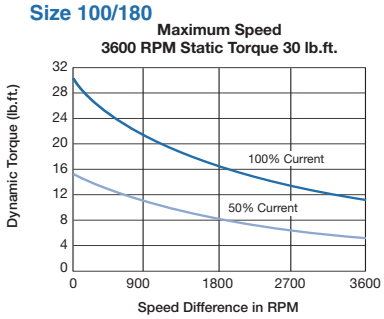

Size 210/215

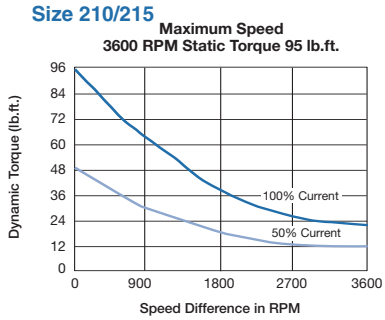

Specifications

UM Size	Static Torque lb. ft.	Maximum RPM	Voltage DC
50	16	3600	6, 24, or 90
100	30	3600	6, 24, or 90
180	30	3600	6, 24, or 90
210	95	3600	6, 24, or 90
215	95	3600	6, 24, or 90

3. Accessories

Warner Electric UniModules can be fitted with several accessories to extend their capacity and ease of mounting.

a. Conduit Box

NEMA 4 and UL listed, available in standard and washdown versions.

b. Mounting Brackets

Two styles of mounting brackets are available for simplified installation. The base mount is used with the 2030 and 3040 configurations. A motor mount is also available and provides sturdy support for 1020 and 1040 units and a motor.

4. Select Control

Warner Electric manufactures clutch/brake controls to meet several system functions including:

- On/Off
- Torque adjust
- Over excitation
- Position loop

Many requirements beyond function can impact control selection. See the Controls Section on page 141 for complete information.

Part Numbers

Configuration	Model No.	Voltage D.C.	Part No.
1020	UM-50-1020	6	5370-273-016
	UM-50-1020	24	5370-273-018
	UM-50-1020	90	5370-273-017
	UM-100-1020	6	5370-273-026
	UM-100-1020	24	5370-273-028
	UM-100-1020	90	5370-273-027
	UM-180-1020	6	5370-273-006
	UM-180-1020	24	5370-273-008
	UM-180-1020	90	5370-273-007
	UM-210-1020	6	5371-273-002
	UM-210-1020	24	5371-273-004
	UM-210-1020	90	5371-273-003
	UM-215-1020	6	5371-273-076
Motor	UM-215-1020	24	5371-273-077
Clutch/Brake	UM-215-1020	90	5371-273-078
UM-1020 w/Pre-installed control			
UM50-1020	w/CBC-150-1	90	5370-9
UM100-1020	w/CBC-150-1	90	5370-10
UM180-1020	w/CBC-150-1	90	5370-273-122
UM210-1020	w/CBC-150-1	90	5371-4
UM215-1020	w/CBC-150-1	90	5371-273-090
1040	UM-50-1040	6	5370-271-004
	UM-50-1040	24	5370-271-006
	UM-50-1040	90	5370-271-005
	UM-100-1040	6	5370-271-024
	UM-100-1040	24	5370-271-026
	UM-100-1040	90	5370-271-025
	UM-180-1040	6	5370-271-014
	UM-180-1040	24	5370-271-016
	UM-180-1040	90	5370-271-015
	UM-210-1040	6	5371-271-002
	UM-210-1040	24	5371-271-004
	UM-210-1040	90	5371-271-003
	UM-215-1040	6	5371-271-026
Motor Clutch	UM-215-1040	24	5371-271-027
Output Clutch	UM-215-1040	90	5371-271-028
2030	UM-50-2030	6	5370-273-021
	UM-50-2030	24	5370-273-023
	UM-50-2030	90	5370-273-022
	UM-100-2030	6	5370-273-031
	UM-100-2030	24	5370-273-033
	UM-100-2030	90	5370-273-032
	UM-180-2030	6	5370-273-011
	UM-180-2030	24	5370-273-013
	UM-180-2030	90	5370-273-012
	UM-210-2030	6	5371-273-007
	UM-210-2030	24	5371-273-009
	UM-210-2030	90	5371-273-008
	UM-215-2030	6	5371-273-043
Input	UM-215-2030	24	5371-273-044
Clutch/Brake	UM-215-2030	90	5371-273-045
3040	UM-50-3040	6	5370-271-009
	UM-50-3040	24	5370-271-011
	UM-50-3040	90	5370-271-010
	UM-100-3040	6	5370-271-029
	UM-100-3040	24	5370-271-031
	UM-100-3040	90	5370-271-030
	UM-180-3040	6	5370-271-019
	UM-180-3040	24	5370-271-021
	UM-180-3040	90	5370-271-020
	UM-210-3040	6	5371-271-007
	UM-210-3040	24	5371-271-009
	UM-210-3040	90	5371-271-008
	UM-215-3040	6	5371-271-021
Input Clutch	UM-215-3040	24	5371-271-022
Output Clutch	UM-215-3040	90	5371-271-023

Accessories

Description	UM Size	Part No.
Conduit Box	All sizes	5370-101-042
Base Mount Kit for 2030, 3040	50/100	5370-101-004
	180	5370-101-002
	210/215	5371-101-001
Motor Mount Kit for 1020, 1040	50/100	5370-101-010
	180	5370-101-012
	210/215	5371-101-012

How to Order

Motor or Reducer Mounted

Simply combine the size number with the configuration of the required UniModule.

Specify voltage. See chart for specific part numbers. Power-off brake UniModules are found on page 120. Order optional conduit box if desired.

Example

UM-180 1020 90 Volt

- Brake
- Motor Clutch
- Size

Base Mounted

Simply combine the size number with the configuration of the required UniModule. Specify voltage. See chart for specific part numbers. Power-off brake UniModules are found on page 120. Order optional conduit box if desired.

Example

UM-180 2030-B 90 Volt

- Base
- Input Clutch
- Brake
- Size

Select Appropriate Power Supply/Control. See the Controls Section beginning on page 141.

UM-1020 Motor Clutch/Brake Combination

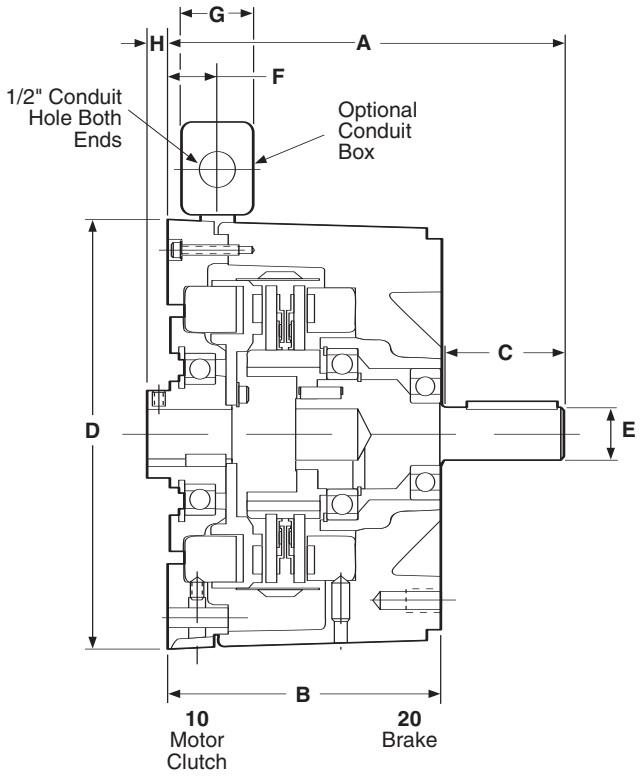

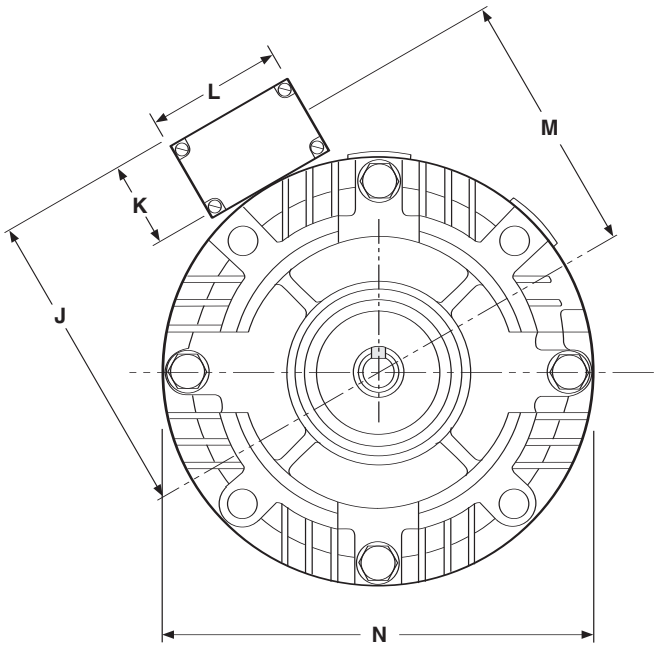

Note: Some 90 VDC units are available with pre-installed controls. On all other modules, conduit box is optional and is ordered separately.

All dimensions are nominal, unless otherwise noted.

Size	A	B	C	D	E	F	G	H
50	6.750	4.844	1.813	6.750	.625	.937	2.203	—
100	6.750	4.844	1.812	6.750	.625	.937	2.203	.104
180	6.828	4.844	1.812	6.750	.875	.937	2.203	—
210	8.891	5.922	2.500	9.250	1.125	.500	2.203	.500
215	9.391	5.922	3.000	9.250	1.375	.500	2.203	.500

Size	I	J	K	L	M	N
50	3.250	5.531	2.188	3.250	4.438	6.688
100	3.250	5.531	2.188	3.250	4.438	6.688
180	3.250	5.531	2.188	3.250	4.438	6.688
210	3.250	6.859	2.188	3.250	5.766	9.688
215	3.250	6.859	2.188	3.250	5.766	9.688

Specifications

Model Size	Voltage DC	Static Torque lb. ft.	Max. RPM	NEMA Frame Size
50	6, 24, 90	16	3600	56C/48Y*
100	6, 24, 90	30	3600	56C/48Y**
180	6, 24, 90	30	3600	182C/143TC 184C/145TC
210	6, 24, 90	95	3600	213C/182TC 215C/184TC
215	6, 24, 90	95	3600	213TC/215TC

* For 56C/48Y Frame motors 3/4 HP and smaller the UM-100 size may be used where extended life is desirable.

** UM-100 size is recommended for motors 1 HP and larger.

For NEMA standard frame sizes, see page 137.

UM-1040 Motor Clutch/Output Clutch Combination

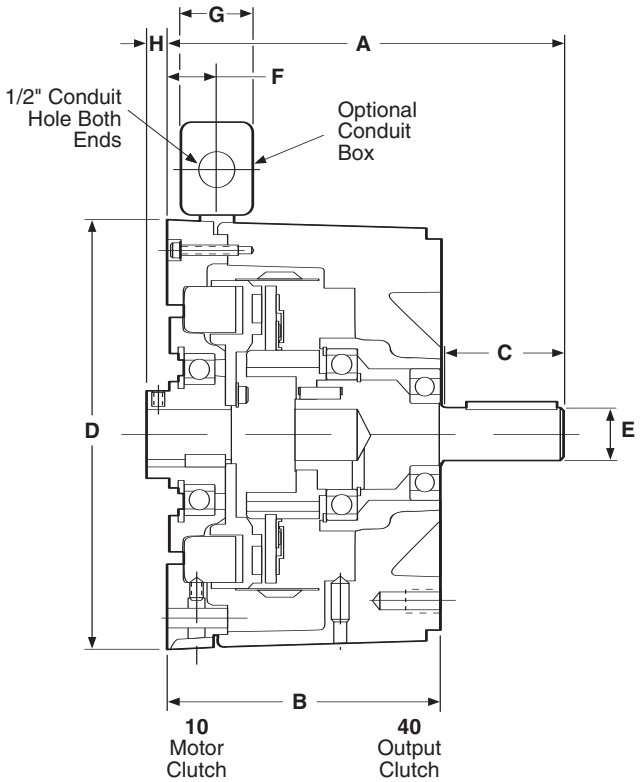

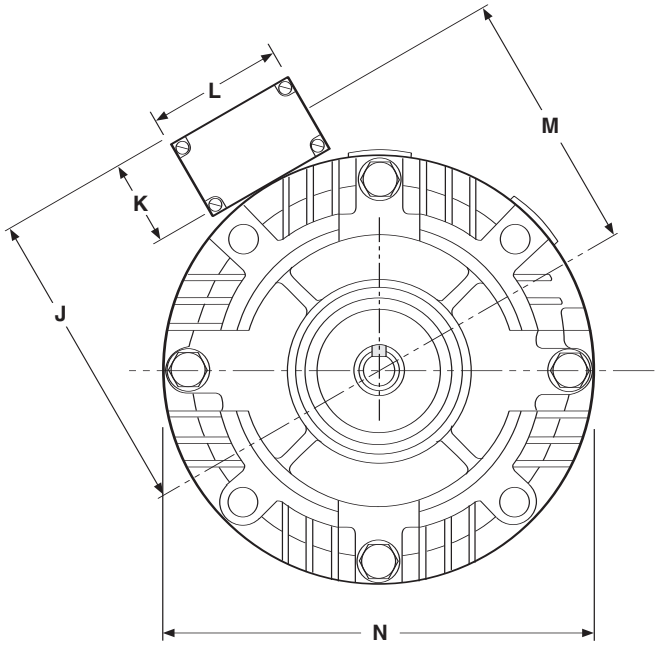

Note: Conduit box is optional and is ordered separately.

All dimensions are nominal, unless otherwise noted.

Size	A	B	C	D	E	F	G	H
50	6.750	4.844	1.813	6.750	.625	.937	2.203	—
100	6.750	4.844	1.812	6.750	.625	.937	2.203	.104
180	6.828	4.844	1.812	6.750	.875	.937	2.203	—
210	8.891	5.922	2.500	9.250	1.125	.500	2.203	.500
215	9.391	5.922	3.000	9.250	1.375	.500	2.203	.500

Size	I	J	K	L	M	N
50	3.250	5.531	2.188	3.250	4.438	6.688
100	3.250	5.531	2.188	3.250	4.438	6.688
180	3.250	5.531	2.188	3.250	4.438	6.688
210	3.250	6.859	2.188	3.250	5.766	9.688
215	3.250	6.859	2.188	3.250	5.766	9.688

Specifications

Model Size	Voltage DC	Static Torque lb. ft.	Max. RPM	NEMA Frame Size
50	6, 24, 90	16	3600	56C/48Y*
100	6, 24, 90	30	3600	56C/48Y**
180	6, 24, 90	30	3600	182C/143TC 184C/145TC
210	6, 24, 90	95	3600	213C/182TC 215C/184TC
215	6, 24, 90	95	3600	213TC/215TC

* For 56C/48Y Frame motors 3/4 HP and smaller the UM-100 size may be used where extended life is desirable.

** UM-100 size is recommended for motors 1 HP and larger.

For NEMA standard frame sizes, see page 137.

UM-2030 Input Clutch/Brake Combination
UM-2030-B Input Clutch/Brake Combination – Base Mounted

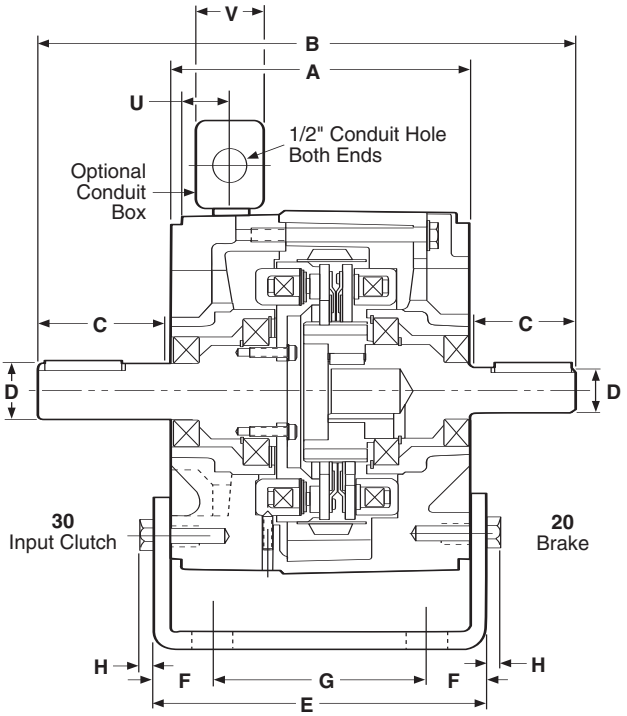

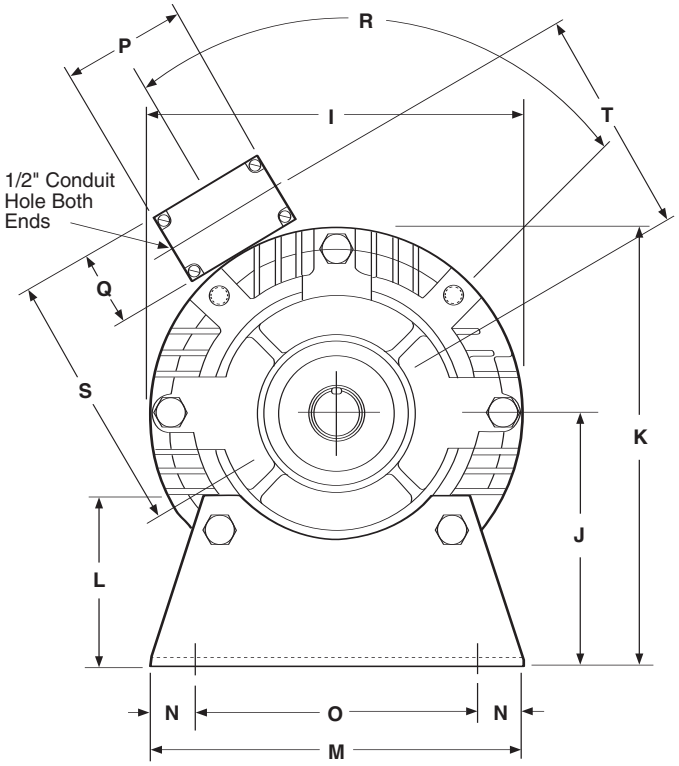

Note: Mounting base and conduit box are optional and are ordered separately.

All dimensions are nominal unless otherwise noted.

Size	A	B	C Min.	D	E	F	G	H	I	J	K	L	M
50	5.719	9.516	1.813	.625	5.672	.844	4.000	.344	6.688	3.500	6.844	2.000	6.000
100	5.719	9.516	1.890	.625	5.672	.844	4.000	.344	6.688	3.500	6.844	2.000	6.000
180	5.719	9.656	1.890	.875	5.672	.844	4.000	.344	6.688	4.500	7.844	3.000	6.625
210	7.719	12.969	2.500	1.125	8.203	1.094	6.000	.437	9.688	5.250	9.906	3.375	9.000
215	7.719	12.969	2.500	1.375	8.203	1.094	6.000	.437	9.688	5.250	9.906	3.375	9.000

Size	N	O	P	Q	R	S	T	U	V
50	.500	5.000	3.125	2.188	75°	5.531	4.438	1.125	2.203
100	.500	5.000	3.125	2.188	75°	5.531	4.438	1.125	2.203
180	.500	5.000	3.125	2.188	75°	5.531	4.438	1.125	2.203
210	.625	7.750	3.125	2.188	70°	6.859	5.766	1.625	2.203
215	.625	7.750	3.125	2.188	70°	6.859	5.766	1.625	2.203

Specifications

Model Size	Voltage DC	Static Torque lb. ft.	Max. RPM
50	6, 24, 90	16	3600
100	6, 24, 90	30	3600
180	6, 24, 90	30	3600
210	6, 24, 90	95	3600
215	6, 24, 90	95	3600

UM-3040 Input Clutch/Output Clutch Combination
UM-3040-B Input Clutch/Output Clutch Combination–Base Mounted

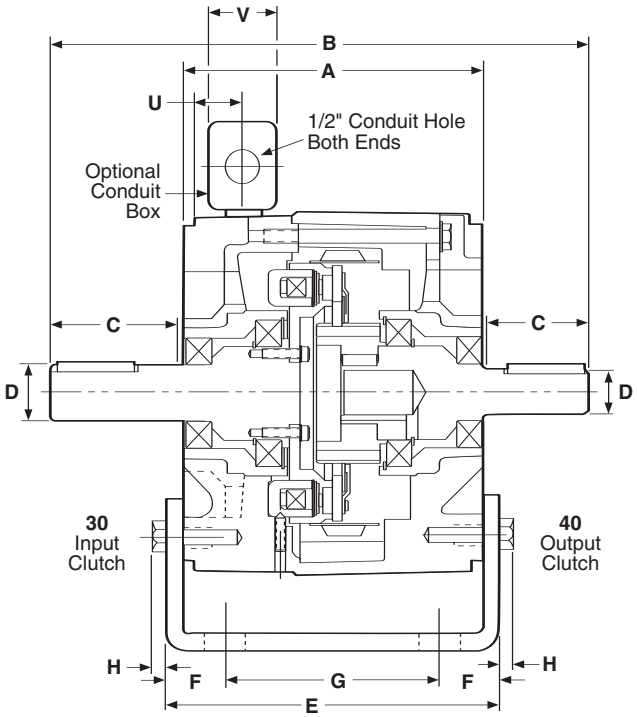

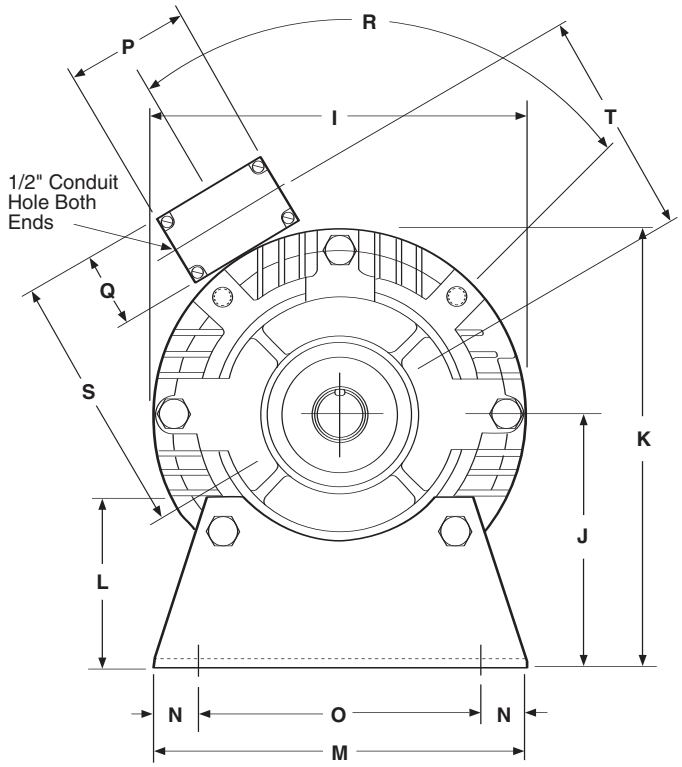

Note: Mounting base and conduit box are optional and are ordered separately.

All dimensions are nominal unless otherwise noted.

Size	A	B	C Min.	D	E	F	G	H	I	J	K	L	M
50	5.719	9.516	1.813	.625	5.672	.844	4.000	.344	6.688	3.500	6.844	2.000	6.000
100	5.719	9.516	1.890	.625	5.672	.844	4.000	.344	6.688	3.500	6.844	2.000	6.000
180	5.719	9.656	1.890	.875	5.672	.844	4.000	.344	6.688	4.500	7.844	3.000	6.625
210	7.719	12.969	2.500	1.125	8.203	1.094	6.000	.437	9.688	5.250	9.906	3.375	9.000
215	7.719	12.969	2.500	1.375	8.203	1.094	6.000	.437	9.688	5.250	9.906	3.375	9.000

Size	N	O	P	Q	R	S	T	U	V
50	.500	5.000	3.125	2.188	75°	5.531	4.438	1.125	2.203
100	.500	5.000	3.125	2.188	75°	5.531	4.438	1.125	2.203
180	.500	5.000	3.125	2.188	75°	5.531	4.438	1.125	2.203
210	.625	7.750	3.125	2.188	70°	6.859	5.766	1.625	2.203
215	.625	7.750	3.125	2.188	70°	6.859	5.766	1.625	2.203

Specifications

Model Size	Voltage DC	Static Torque lb. ft.	Max. RPM
50	6, 24, 90	16	3600
100	6, 24, 90	30	3600
180	6, 24, 90	30	3600
210	6, 24, 90	95	3600
215	6, 24, 90	95	3600

UniModule – Ceramic Faced

UM-C Series

High Performance with Extended Life

UniModules with ceramic friction material are pre-burnished during manufacturing to provide rated torque performance upon start up. They have been designed to mate easily with industry standard motors, reducers and other power transmission components.

- Bolt-it-down, wire-it-up . . . it's ready to go.
- Available in 3 sizes; 50, 180 and 210 and 2 configurations; 1020 and 2030.
- Standard voltages available 24V and 90V DC.
- C-face or foot mounted.
- No maintenance required.
- Accurate positioning when used with CBC-1000 Indexer and CBC-700 OEX control.

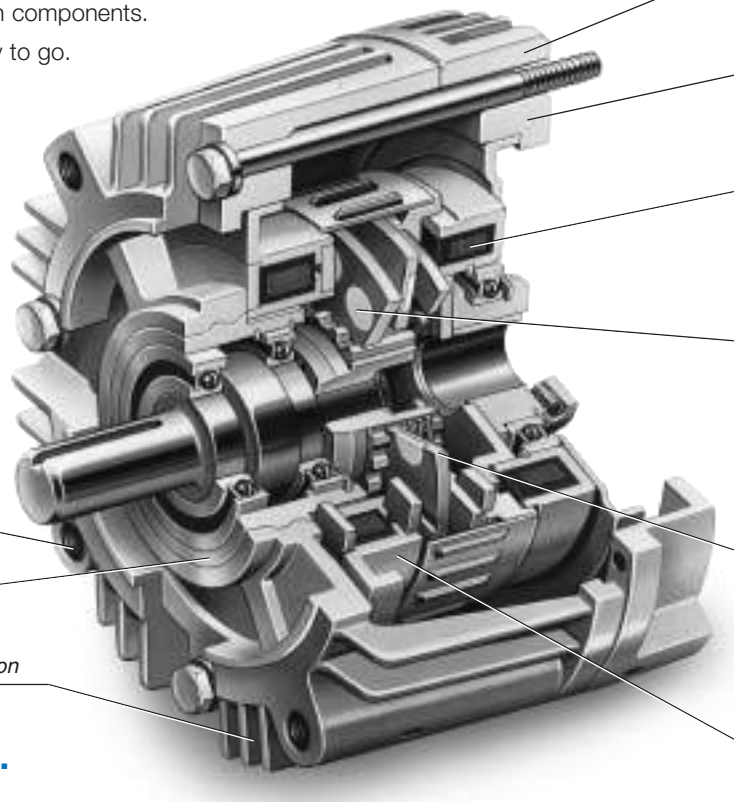

The Ceramic Difference . . .

Extended Life for High Cycle Rate Use

Ceramic faced clutches and brakes have been designed specifically for rapid cycling applications to satisfy today's needs for high speed equipment. Ceramic friction material provides excellent wear resistance that extends life 3 to 5 times that of standard clutch/brakes in demanding applications.

Consistent Torque and Cycle Repeatability

Preloaded armatures keep the ceramic friction surfaces lightly in contact to provide consistent torque and cycle-to-cycle repeatability. Variation is reduced by up to 30% over standard units. Autogaps are not required.

Controllability – Smooth Start/Stop

With the ceramic friction surfaces always in contact, dynamic torque response is fast and precise. When used with a CBC-700 over-excitation control and CBC-1000 programmable counter, exceptional closed loop clutch/brake performance can be achieved approaching that of more expensive motion control technologies – The PerformancePlus difference!

UM-C Product Life

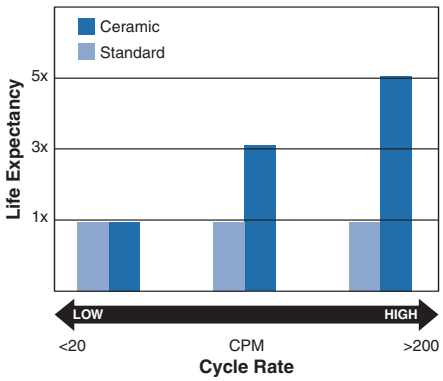

UM-C Cycle Repeat

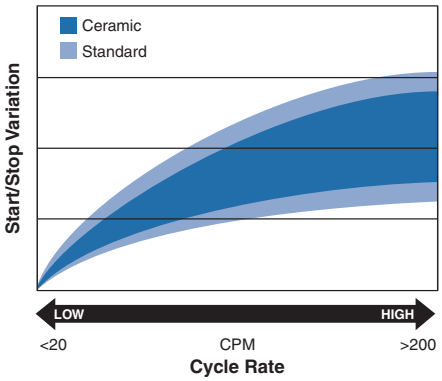

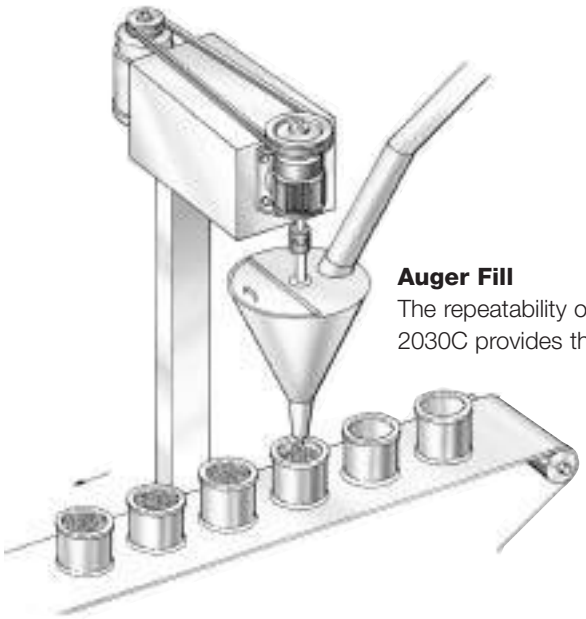

Auger Fill
The repeatability of the Ceramic UniModule 2030C provides the consistent fill levels.

UniModule 2030-C with base assembly mounted as a separate drive unit.

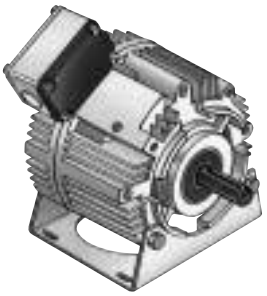

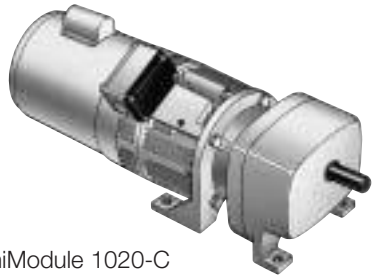

UniModule 1020-C clutch/brake between C-face motor and reducer.

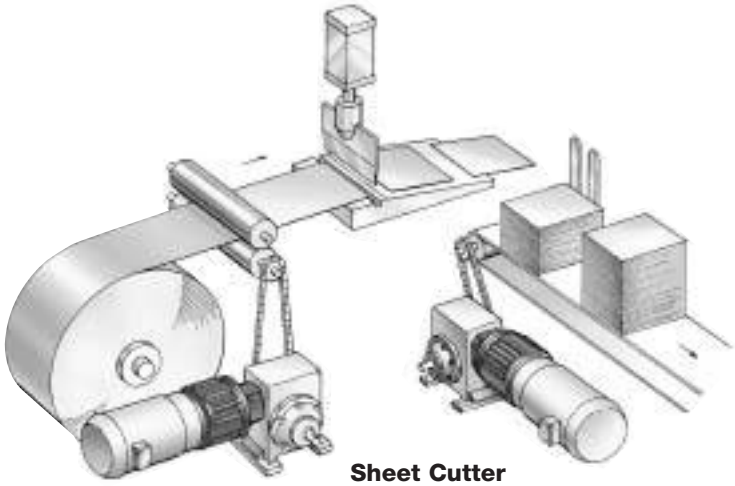

Sheet Cutter
The Ceramic UniModules provide high cycle rate clutch/brake indexing.

Selection

Ceramic UniModule clutch/brake units may be mounted directly to NEMA C-face motors and reducers, or can be base mounted.

1. Determine Mounting Configuration

a. NEMA C-face Mounting (1020 Configuration)

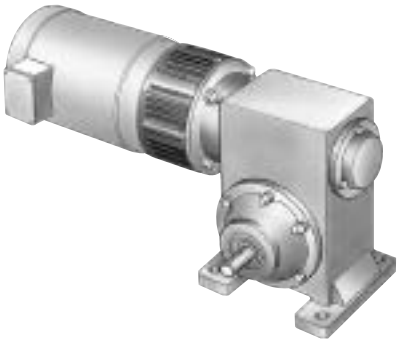

To select the correct Ceramic UniModule package, determine the NEMA frame size of your motor and/or reducer, and choose the corresponding size UniModule from the Frame Size Selection chart.

b. Base Mount (2030 Configuration)

Ceramic UniModule assemblies may be mounted as separate drive units driven from the prime mover by V-belts, chain and sprockets, couplings, timing belts and other standard power transmission components.

Select the correct size module from the Horsepower vs. Shaft Speed chart by determining the motor horsepower and RPM at the module location. The correct size UniModule is shown at the intersection of the HP and operating speed. For additional sizing information, refer to the technical sizing procedure (step 2).

2. Determine Technical Requirements

Technical considerations for sizing and selection are torque and heat dissipation. Each merits careful consideration, especially heat dissipation as over time, use in excessive temperature environments will have an adverse effect on bearing life and coil wire insulation integrity.

Compare the calculated torque requirement with the average dynamic torque ratings. Select a unit with adequate torque. If the unit selected on torque is different than the unit selected based on heat, select the larger size unit.

Frame Size Selection

NEMA Frame Size	UniModule Size
56C/48Y	UM-50-C
182C/143TC 184C/145TC	UM-180-C
213C/182TC 215C/184TC	UM-210-C

Horsepower vs. Shaft Speed

HP	SHAFT SPEED AT CLUTCH (IN RPM)																	
▼	100	200	300	400	500	600	700	800	900	1000	1100	1200	1500	1800	2000	2400	3000	3600
1/4																		
1/2																		
3/4																		
1																		
1-1/2																		
2																		
3																		
5																		
7-1/2																		
10																		

UM-50-C

UM-180-C

UM-210-C

a. Heat Dissipation Sizing

Friction surfaces slip during the initial period of engagement and, as a result, heat is generated. The clutch/brake selected must have a heat dissipation rating greater than the heat generated by the application. Therefore, in high inertia or high cycle rate applications, it is necessary to check the heat dissipation carefully. Inertia, speed and cycle rate are the required parameters.

Heat dissipation requirement is calculated as follows:

$E = 1.7 \times WR^2 \times (N/100)^2 \times F$

where:

E = Heat (lb. ft./min.)

WR^2 = Total reflected inertia at the clutch/brake shaft. Include the clutch/brake output inertia. (lb.ft.^{2})

N = Speed in revolutions per minute. (RPM)

F = Cycle rate in cycles per minute (CPM)

Compare the calculated heat generated in the application to the unit ratings using the heat dissipation curves. Select the appropriate unit that has adequate heat dissipation ability.

Heat Dissipation Curves

UM-50-C

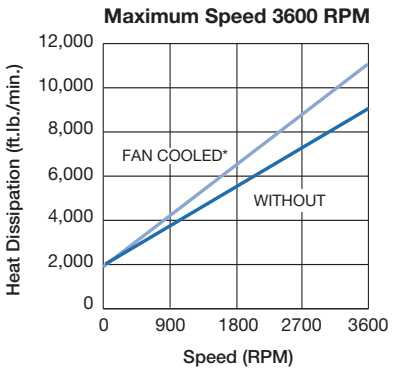

UM-180-C

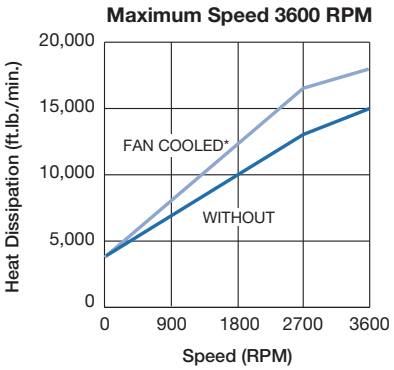

UM-210-C

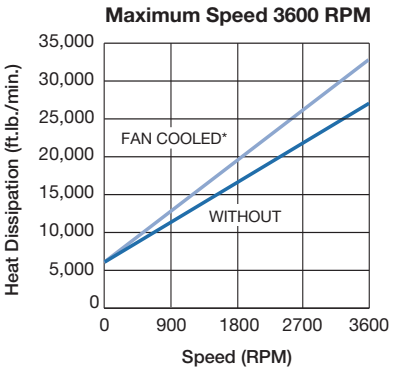

* Fan accessory kit available for 1020 configuration

b. Torque Sizing

For most applications, the correct size clutch/brake can be selected from the Horsepower vs. Shaft Speed chart located at the bottom of this page. Determine the motor horsepower and the RPM at the clutch/brake. The correct size unit is shown at the intersection of horsepower and shaft speed.

If the static torque requirements are known, refer to the technical ratings chart to select a unit.

For some applications, the torque requirement is determined by the time allowed to accelerate and decelerate the load. (This time is generally specified in milliseconds.) For these applications, it is necessary to determine the torque requirement based on load inertia and the time allowed for engagement.

The torque requirements are calculated as follows:

$T = (WR^2 \times N) / (308 \times t)$

where:

T = Average Dynamic Torque (lb. ft.)

WR^2 = Total reflected inertia at the clutch/brake shaft. Include the clutch/brake output inertia. (lb. ft.^{2})

N = Speed in revolutions per minute. (RPM)

t = Time allowed for the engagement (sec)

C-face Clutch/Power-on Brake Dynamic Torque Curves

Size 50

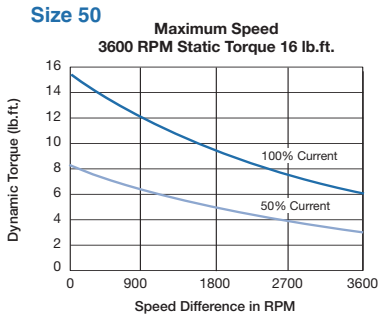

Size 100/180

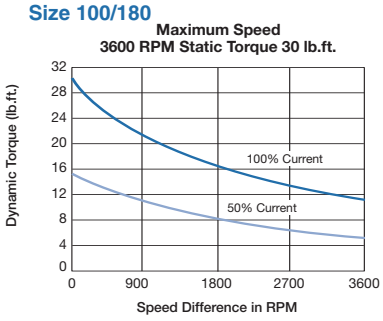

Size 210/215

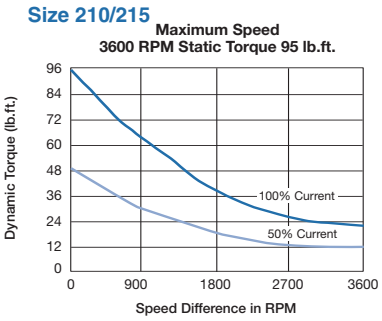

Specifications

UniModule Size	Shaft Dia.	Static Torque lb. ft.	Horsepower	Max. RPM	Voltage DC	NEMA Frame Size
UM50-C	5/8"	16	1/4-3/4	3600	6, 24 and 90	56C/48Y
UM180-C	7/8"	30	1-2	3600	6, 24 and 90	182C/143TC 184C/145TC
UM210-C	1-1/8"	95	3-5	3600	6, 24 and 90	213/182TC 215C/184TC

3. Select Accessories

Warner Electric UniModules can be fitted with several accessories to extend their capacity and ease of mounting.

a. Conduit Box
NEMA 4 and UL listed.

b. Mounting Brackets
Two styles of mounting brackets are available for simplified installation. The base mount is used with the 2030 configuration. A motor mount is also available and provides sturdy support for the 1020 and a motor.

c. Fan Kit (1020 only)
Extends the thermal capacity of any size UM. Mounts between motor and UM, includes shaft fan, guard and hardware.

4. Select Control

Warner Electric manufactures clutch/brake controls to meet several system functions including:

- On/Off
- Torque adjust
- Overexcitation
- Position loop

Many requirements beyond function can impact control selection. See the Controls Section on page 141 for complete information.

Part Numbers

Configuration	Model No.	Voltage	Part Number
1020 (Motor Clutch/Brake)	UM 50-1020-C	6	5370-273-077
		24	5370-273-078
		90	5370-273-079
	UM 180-1020-C	6	5370-273-073
		24	5370-273-074
		90	5370-273-075
	UM 210-1020-C	6	5371-273-035
		24	5371-273-036
		90	5371-273-037
2030 (Input Clutch/Brake)	UM 50-2030-C	6	5370-273-085
		24	5370-273-086
		90	5370-273-087
	UM 180-2030-C	6	5370-273-081
		24	5370-273-082
		90	5370-273-083
	UM 210-2030-C	6	5371-273-039
		24	5371-273-040
		90	5371-273-041

Accessories

Description	UM-C Size	Part Number
Conduit Box	All sizes	5370-101-042
Conduit Control	CBC-150-1 (120 V)	6004-448-001
	CBC-150-2 (220 V)	6004-448-002
Fan Kits 1020	50	5370-101-055
	180	5370-101-054
	210	5371-101-029
Base Mount Kits for 1020-C	50	5370-101-004
	180	5370-101-002
	210	5371-101-001
Motor Mount Kit for 2030-C	50	5370-101-010
	180	5370-101-012
	210	5371-101-012

How to Order

Motor or Reducer Mounted

Simply combine the size number with the configuration of the required UniModule. Specify voltage. See chart for specific part numbers. Order optional conduit box if desired.

Example

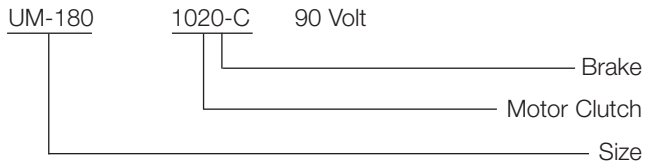

Base Mounted

Simply combine the size number with the configuration of the required UniModule. Specify voltage. See chart for specific part numbers. Order optional conduit box if desired.

Example

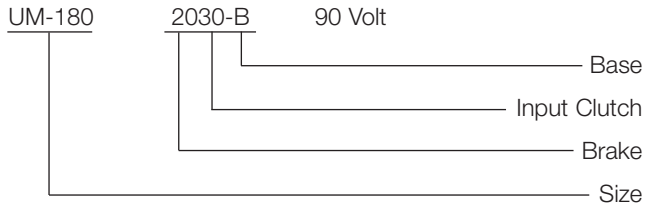

UM-1020-C Motor Clutch/Brake Combination

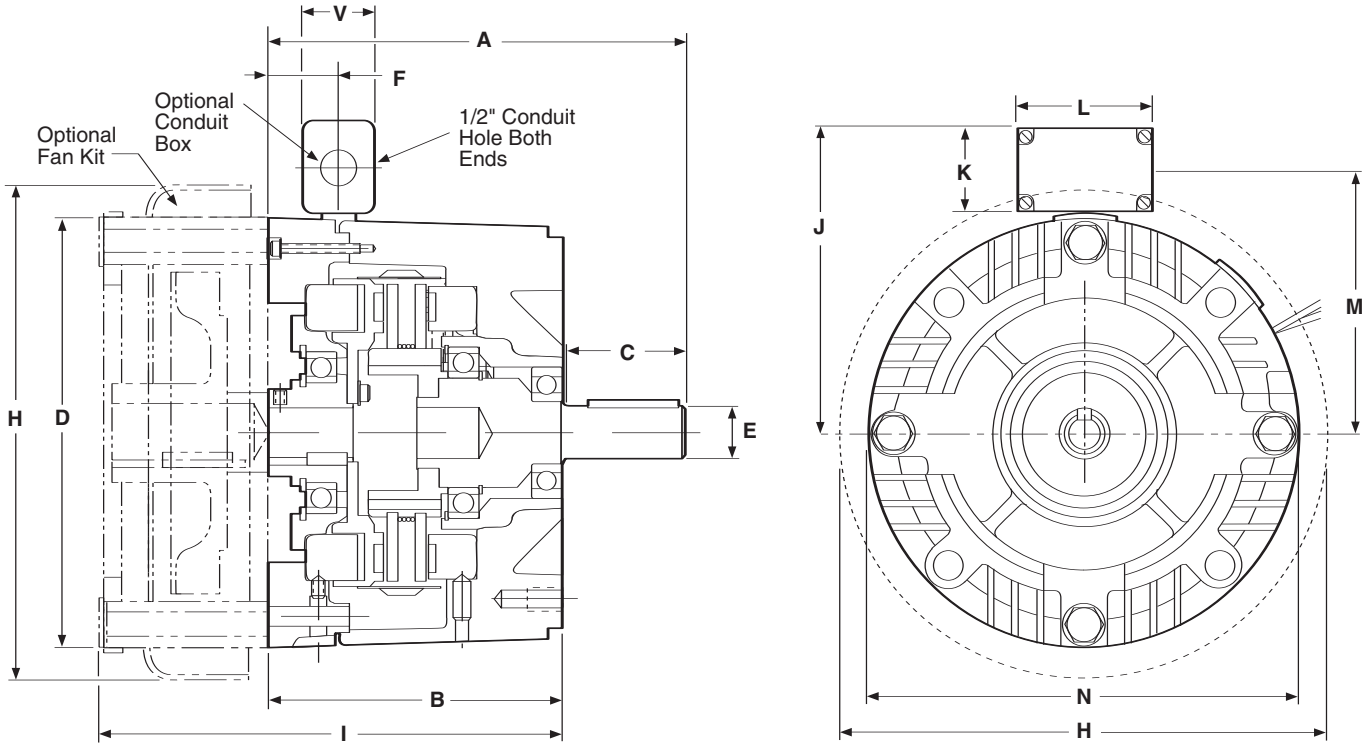

All dimensions are nominal, unless otherwise noted.

Size	A	B	C	D	E	F	G	H	I	J	K	L	M	N
50	6.750	4.844	1.813	6.750	.625	.937	2.203	7.687	7.274	5.531	2.188	3.125	4.438	6.688
180	6.828	4.844	1.812	6.750	.875	.937	2.203	7.687	7.274	5.531	2.188	3.125	4.438	6.688
210	9.391*	6.422*	2.500	9.250	1.125	1.125*	2.203	10.187	9.297	6.859	2.188	3.125	6.766	9.688

*Dimension includes the .500 thick adapter. Required for C-face mounting to a motor.

Specifications

UniModule Size	Shaft Dia.	Static Torque lb. ft.	Horsepower	Max. RPM	Voltage DC	NEMA Frame Size
UM50-C	.625	16	1/4-3/4	3600	6, 24 and 90	56C/48Y
UM180-C	.875	30	1-2	3600	6, 24 and 90	182C/143TC 184C/145TC
UM210-C	1.125	95	3-5	3600	6, 24 and 90	213/182TC 215C/184TC

For NEMA Standard Frame size, see page 137.

UM-2030-C Brake/Input Clutch Combination
UM-2030-C-B Brake/Input Clutch Combination–Base Mounted

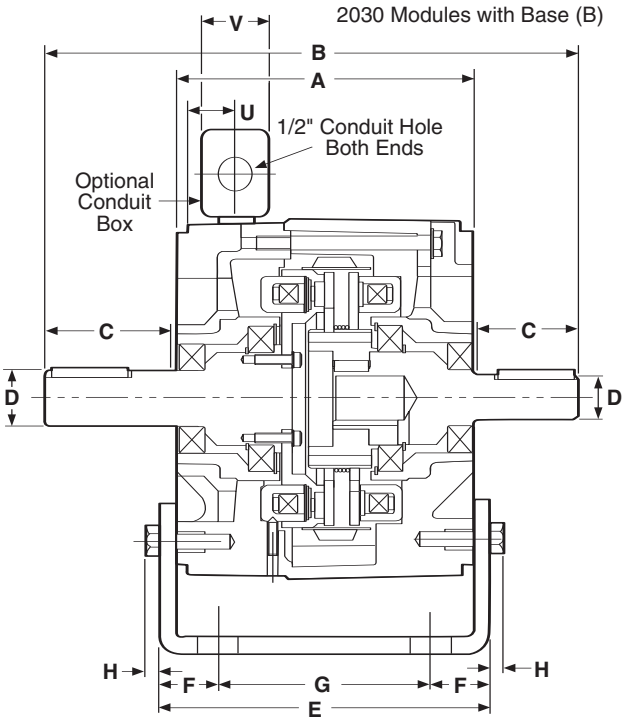

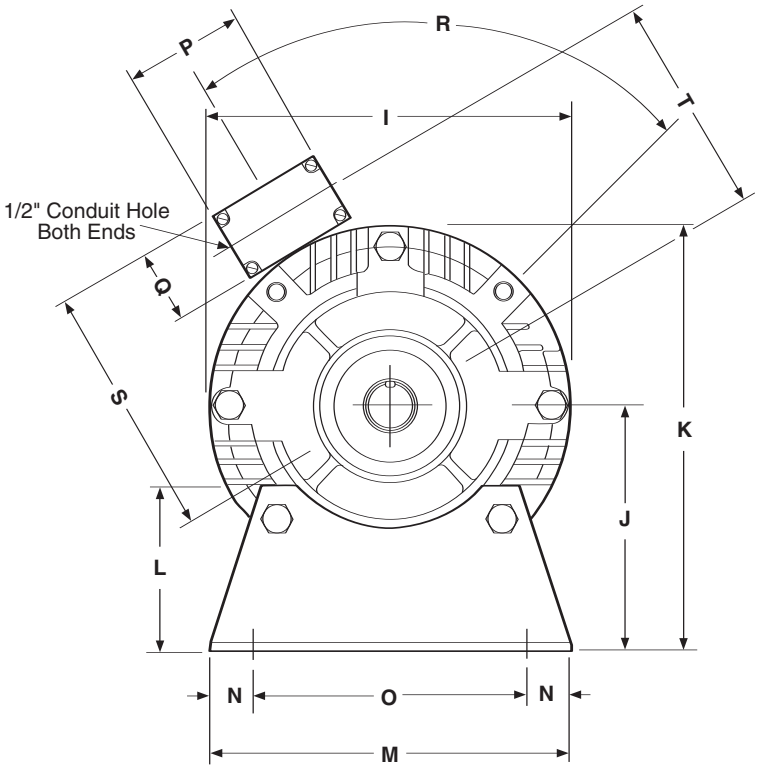

Note: Mounting base is optional and must be ordered separately.

All dimensions are nominal, unless otherwise noted.

Size	A	B	C Min.	D	E	F	G	H	I	J	K
50	5.719	9.516	1.813	.625	5.672	.844	4.000	.344	6.688	3.500	6.844
180	5.719	9.656	1.890	.875	5.672	.844	4.000	.344	6.688	4.500	7.844
210	7.719	12.969	2.500	1.125	8.203	1.094	6.000	.437	9.688	5.250	9.906

Size	L	M	N	O	P	Q	R	S	T	U	V
50	2.000	6.000	.500	5.000	3.125	2.188	75°	5.531	4.438	1.125	2.203
180	3.000	6.625	.500	5.000	3.125	2.188	75°	5.531	4.438	1.125	2.203
210	3.375	9.000	.625	7.750	3.125	2.188	70°	6.859	5.766	1.625	2.203

Specifications

UniModule Size	Shaft Dia.	Static Torque lb. ft.	Horsepower	Max. RPM	Voltage DC	NEMA Frame Size
UM50-C	.625	16	1/4-3/4	3600	6, 24 and 90	56C/48Y
UM180-C	.875	30	1-2	3600	6, 24 and 90	182C/143TC 184C/145TC
UM210-C	1.125	95	3-5	3600	6, 24 and 90	213/182TC 215C/184TC

For NEMA standard frame sizes, see page 137.